ARL-PROP-TM-464

AR-005-643

DTIC FILE COPY

AD-A218 366

DEPARTMENT OF DEFENCE

DEFENCE SCIENCE AND TECHNOLOGY ORGANISATION

AERONAUTICAL RESEARCH LABORATORY

MELBOURNE, VICTORIA

Propulsion Technical Memorandum 464

ANALYSES OF POWER CONSUMPTION FOR TWO SLIDING VANE TYPE COMPRESSORS (U)

by

A.A. MABANTA

DTIC
ELECTE
FEB 26 1990
S B D

Approved for Public Release.

(C) COMMONWEALTH OF AUSTRALIA 1989

JULY 1989

90 02 23 127

AR-005-643

DEPARTMENT OF DEFENCE
DEFENCE SCIENCE AND TECHNOLOGY ORGANISATION
AERONAUTICAL RESEARCH LABORATORY

Propulsion Technical Memorandum 464

ANALYSES OF POWER CONSUMPTION FOR TWO SLIDING VANE TYPE COMPRESSORS (U)

by

A.A. MABANTA

SUMMARY

An outline is given of the theoretical analyses carried out for estimating the power requirements of two sliding vane compressor designs, adapted for high speed operation, to determine if advantages exist over a trailing vane compressor, previously used for air scavenging in an experimental two stroke piston engine.

DSTO ARL
MELBOURNE

(C) COMMONWEALTH OF AUSTRALIA 1989

POSTAL ADDRESS: Director, Aeronautical Research Laboratory,
P.O. Box 4331, Melbourne, Victoria, 3001, Australia

TABLE OF CONTENTS

1. **INTRODUCTION**.....1

2. **Compressor Descriptions**.....1

   2.1 Trailing Vane Type.....1

   2.2 Sliding Vane Types.....2

3. **ESTIMATION OF POWER REQUIREMENTS**.....3

   3.1 Assumptions in Analyses.....3

   3.2 Friction Power Estimation.....4

   3.3 Compression Power Estimation.....5

4. **DISCUSSION OF PREDICTED RESULTS AND COMPARISONS**.....5

5. **CONCLUSIONS**.....8

6. **SUGGESTED IMPROVEMENTS ON THE ANALYSES**.....8

ACKNOWLEDGEMENTS.....9

REFERENCES AND BIBLIOGRAPHY.....9

APPENDIX 1.
Expressions for Forces on Vane Centre of Gravity

TABLES

ILLUSTRATIONS

DISTRIBUTION LIST

DOCUMENT CONTROL SHEET

Accession For
NTIS GRA&I ☑
DTIC TAB ☐
Unannounced ☐
Justification
By
Distribution/
Availability Codes
Dist | Avail and/or Special
A-1

NOTATION

b	=	width of vane for separate vanes (Type 2) design (mm)
e	=	offset of rotor axis of rotation from housing centre (mm)
F_{cg}, F_{cgA}, F_{cgB}	=	centrifugal force (N)
F_{cor}, F_{corA}, F_{corB}	=	Coriolis force (N)
F_i, F_{iA}, F_{iB}	=	inertia force (N)
F_p	=	force due to pressure difference across vanes (N)
F_{Rw}	=	friction force due to wall-vane tip contact (N)
h	=	radial length of gap between rotor and housing, measured from rotor axis of rotation (mm)
P_r	=	outlet/inlet pressure ratio
P_{in}	=	inlet pressure (kPa)
$\dot{Q}_{out}$	=	air flow rate (1/s)
r_r	=	radius of rotor (mm)
r_h	=	radius of housing for circular housings (mm)
R_o	=	half a vane width using a cardioid housing, Type 1 compressors; constant to describe a cardioid housing (mm)
r, r_A, r_B	=	radial distances of vane tips from rotor axis of rotation (mm)
R_W	=	housing wall reaction on vane (N)
R_{r1}, R_{r2}	=	rotor reactions on vane (N)
$\bar{x}_A$, $\bar{x}_B$	=	radial distances of centres of gravity of vane sections from rotor axis of rotation for Type 1 compressors (mm)
W_{ad}	=	adiabatic work (kW)
W_f	=	friction work (kW)
γ	=	gas constant
μ	=	coefficient of friction

η_{ad}	=	adiabatic efficiency
θ, β	=	angular position of vanes (deg)
τ	=	torque (Nm)
τ_{av}	=	average torque over one revolution (Nm)
ω	=	rotor speed (rad/s)

1. INTRODUCTION

In the late 1970's, as part of the Defence Science and Technology Organization (DSTO) investigation of Remotely Piloted Vehicles (RPVs) for Australian defence use, a study was conducted of the various propulsion systems which might be employed in small RPVs (Ref. 1). From this it was found that a two-stroke Otto or Diesel cycle piston engine driving a propeller or ducted fan was the option which could best satisfy the more important selection criteria of low cost, low vibration, high power to weight ratio, and relatively low specific fuel consumption. It was also found, however, that no units of this particular type of engine then available were entirely well-suited for mini-RPV use.

After considering various two-stroke configurations, a decision was made to test the feasibility of a uniflow-scavenged engine design. After some preliminary tests, two prototypes were then built, both 0.22 litre two-stroke, single cylinder, opposed piston spark-ignition engines, and subsequently tested with a specially designed trailing vane type scavenge compressor. Use of a scavenge air compressor was necessary due to the impracticality of utilising crankcase compression with the opposed piston configuration.

As development proceeded, with the goal of producing 15 kW brake power at 8000 rpm, it became apparent that the trailing vane compressor was less efficient than was desirable and an important part of the development activity has been the investigation of alternative compressor designs, to determine if compressor power requirements can be reduced. A theoretical analysis (Ref. 2) showed some fundamental sources of power loss in the trailing vane type and stimulated the search for alternative designs.

This document outlines the theoretical analyses carried out for estimating the power requirements of two straight sliding vane compressor designs, adapted for high speed operation, to determine if advantages exist over the trailing vane configuration. Basic descriptions of the designs are included, and comparisons between predicted and test performances of prototypes are made. In addition, superiority of one of the straight sliding vane types over the other, in terms of potential power consumption, is demonstrated.

2. COMPRESSOR DESCRIPTIONS

2.1 Trailing Vane Type

The trailing vane compressor is a novel design, with four free-trailing vanes hinged on a cylindrical rotor, which is mounted eccentrically in a cylindrical housing (Fig. 1).

As the rotor turns the vanes are flung outwards by centrifugal force against the housing, trapping air between them and moving it from the inlet to the outlet port.

Compression occurs as the air is carried around the decreasing annular space between the rotor and the housing.

At low pressure ratios this compressor approximates to a positive displacement device. However, near the outlet ports the pressure difference across the vanes tends to oppose the centrifugal force, and at sufficiently high delivery pressures the centrifugal force can be completely counteracted. Under these circumstances the vanes lose contact with the housing, thereby allowing air to leak past the blades, preventing further pressure rise. This characteristic played an important part in the initial choice of the configuration. It was argued that friction between the blades and the housing would be reduced by this tendency of the pressure loads to oppose the centrifugal force.

2.2 Sliding Vane Types

One of the sliding vane compressor designs considered (here referred to as Type 1) can have either one or two straight vanes, each of which slides through a diametrical slot passing through the axis of rotation of the rotor (Fig. 2). If two vanes are to be used, provision must be made for the vanes to pass through one another at the centre of the rotor.

The cylindrical rotor is mounted eccentrically in a housing with either a circular or a cardioid cross-section. Use of the relatively more complex cardioid shape may be preferred so as to have each vane move in simple harmonic motion, resulting in a sinusoidally varying wall reaction with lower peak magnitude than would result if a circular cross-section were used.

It was expected that the single-piece design of each vane would result in decreased friction between vane tip and housing, compared with the equivalent separate vanes design (referred to as Type 2) described later.

Consider a particular position of a vane in rotation for the Type 1 design (Fig. 3).

Let the vane be divided in two sections (v1 and v2) by an imaginary line perpendicular to the vane and passing through the axis of rotation of the rotor. These sections vary in length as the rotor turns. Furthermore, let v1 and v2 have variable masses proportional to, and each concentrated at a point along, the vane height at the instant being considered (m1 and m2). It is clear that centrifugal force acts on both masses in opposite directions, causing tension to exist in that part of the vane between m1 and m2. In this way, centrifugal force acting on m2 partly counteracts the centrifugal force acting on m1, resulting in a reduced housing wall reaction on the vane, and hence reduced friction between the housing and vane tip. An additional feature of this vane design is the existence of only a single line contact between each vane and the housing, since there must always be a finite radial clearance between each vane and the housing.

Furthermore, this contact will occur only between the housing and the tip of the longer vane section (v1 in Fig. 3) as measured from the rotor axis of rotation.

The Type 2 compressor design, in which separate radial vanes are used, is illustrated in Fig. 4. Once more, either circular or cardioid housings may be used. The principle of operation is similar to Type 1, but with some important differences. Centrifugal force acting on one vane cannot be counteracted even partly by centrifugal force acting on the diametrically opposite vane, since they are separate. Also, contact is maintained between all vane tips and the housing during the whole revolution of the rotor. This means that a Type 2 design has twice the number of contact lines with the housing, where friction will act, compared with an equivalent Type 1 design, although volumetric efficiency may be higher.

For both sliding vane designs, pressure difference across a vane cannot directly cause it to slide and allow air to escape, so it was expected that delivery rate would not be greatly affected by outlet pressure, and that the compressors would have nearly constant volume delivery regardless of delivery pressure.

Both the trailing vane and sliding vane configurations have the advantage of small size, and hence light weight. The latter, however, offers the additional advantage of relative ease of manufacture and hence lower manufacturing cost.

3. ESTIMATION OF POWER REQUIREMENTS

3.1 Assumptions in Analyses

The following have been assumed in the power consumption analyses (refer Figs. 2 and 4). Assumptions are taken for both sliding vane types unless indicated otherwise:

1). For the Type 1 compressor, vane contact occurs only in the section of the housing spanning 180 degrees where the largest space between rotor and housing exists;

2). Volume of air delivered by the compressor per revolution is equal to 1.56 times the annular volume between rotor and housing (the same relationship found in the trailing vane compressor);

3). Rotor rotates at a constant speed ω;

4). Friction forces are directly proportional to the corresponding perpendicular force, that is, $F_{fr} = \mu F_n$;

5). The value of the coefficient of friction μ is 0.08;

6). Pressure difference exists across each vane only when the vane or vane section is exposed to both the inlet and outlet pressures; the value of this pressure difference is assumed to be 80% of the overall pressure rise across the compressor;

7). Inertia, Coriolis, and centrifugal forces act through the centre of gravity of each vane or vane section;

8). All forces are applied at line contacts;

9). Rotor is an infinitely thin cylindrical shell; in Type 2 the rotor exerts forces on a vane at the lines where the surface of the rotor meets the vane, and the inner tip of the vane;

10). Adiabatic efficiency varies with speed and pressure ratio as in Fig. 5 (assumed values);

11). Power losses in bearings are neglected.

3.2 Friction Power Estimation

Forces experienced by a vane in the compressors are shown in Figs. 2 and 4.

Balancing forces along the x' and y' axes, and moments about point M, yields the following equations:

Type 1 Compressor:

$$R_{r1} = \frac{\mu R_W(r_A+r_r)+F_{corA}(r_A+\bar{x}_A)+F_{corB}(r_A-\bar{x}_B)+F_p\left(\frac{r_A+3r_r}{2}\right)}{2r_r}$$

$$R_{r2} = \frac{(r_A-r_r)R_{r1}-F_{corB}(r_A+\bar{x}_B)-F_{corA}(R_A-\bar{x}_A)-F_p\left(\frac{r_A-r_r}{2}\right)}{(r_A+r_r)}$$

$$R_W = (F_{cgA}+F_{iA}) - \mu\,(|R_{r1}|+|R_{r2}|) - (F_{cgB}-F_{iB}) \quad \text{for } \theta \le 90^\circ$$

$$= (F_{cgA}+F_{iA}) + \mu\,(|R_{r1}|+|R_{r2}|) - (F_{cgB}-F_{iB}) \quad \text{for } \theta > 90^\circ$$

Type 2 Compressor

$$R_{r1} = \frac{F_p(2b-h) + F_{cor}b + 2\mu b R_W}{2(b-h)}$$

$$R_{r2} = \frac{2R_{r1}h - F_p h - F_{cor}b}{2b}$$

$$R_w = (F_{cg}+F_i) - \mu(|R_{r1}|+|R_{r2}|) \quad \text{for } \theta \le 90^o, \theta \ge 270^o$$

$$= (F_{cg}+F_i) + \mu(|R_{r1}|+|R_{r2}|) \quad \text{for } 90^o < \theta < 270^o$$

Torque required to rotate the vane is

$$\tau = (R_{r1} + R_{r2})\, r_r \qquad \text{for Type 1}$$

$$= R_{r1} r_r - R_{r2}\,(r_r + h - b) \qquad \text{for Type 2}$$

Average friction power requirement for a particular speed is then obtained from the equation

$$W_f = \tau_{av}\, \omega$$

3.3 Compression Power Estimation

Adiabatic compression work is given by the expression

$$W_{ad} = \left(\frac{\gamma}{\gamma-1}\right) P_{in}\, \dot{Q}_{out} \left(P_r^{\frac{\gamma-1}{\gamma}} - 1 \right)$$

and actual work done is

$$W_{act} = \frac{W_{ad}}{\eta_{ad}}$$

4. DISCUSSION OF PREDICTED RESULTS AND COMPARISONS

Computer programs have been written to utilise the formulae set out above. The program listings have not been included in this document; however, these can be made available from the author by request.

Theoretical values of wall reaction forces at a speed of 4800 rpm and pressure ratio of 1.22 are illustrated graphically in Fig. 6a for Type 1 and Type 2 compressors, specifications for which can be found in Table 1.

It can be seen that for both straight sliding vane designs, the use of a circular housing results in higher peak wall reactions than for the cardioid shape. Figure 6b shows that the torque required for each vane is also larger using a circular housing shape for both compressor types, and that the Type 1 compressor will potentially consume less power than the Type 2 at the same conditions. The discontinuities in the torque curves are the result of the assumption of sudden application of pressure force on the vanes (assumption 6).

A comparison of predicted results for a single-piece vane compressor of similar dimensions using a cardioid housing shape and observed results for a trailing vane compressor designated TV-AL5 can be seen in Fig. 7. Specifications for the model and for TV-AL5 are shown in Table 2. Note that the annular volume specified between rotor and housing for the theoretical model was set equal to that of TV-AL5.

The ratio of housing diameter D_h to rotor diameter D_r for the trailing vane compressor is approximately 1.2, and values of R_o, e, and compressor length used were chosen to give the same approximate ratio also. The use of two vanes is assumed in this particular comparison.

From the curves in Fig. 7 it can be seen that the Type 1 compressor will consume less power for the same goemetrical displacement at the same speed and pressure ratio. It can also be seen that as speed increases, so too do the predicted differences in power consumption between the two compressors, with a potential saving of 1.25 kW occurring at 4800 rpm, P_r=1.22. It is also evident that the trailing vane compressor power requirement is less affected by an increase in output pressure. This is due to the output pressure partially counteracting the centrifugal force acting on the vanes, as mentioned before.

To test the design and to check the accuracy of the theoretical analysis, a prototype Type 1 compressor with a single sliding vane and cylindrical housing was made and tested (Figs. 8a), b), c)). Table 3 gives details of the prototype, designated SV-TUF1SB. A cylindrical housing was used due to the shorter time required for its manufacture, compared with that of the relatively more complex cardioid cross-sectional shape. It was also decided to use a single vane for the prototype as it was anticipated that the adverse effect this would have on volumetric efficiency would be more than offset by the halving of friction power loss.

Figure 9 shows the comparison between predicted and observed results. Predicted power consumption is slightly higher than observed, with maximum differences at 4800 rpm of 11% and 4% at pressure ratios of 1.14 and 1.22, respectively.

Figure 10 compares the trends in volume flow rate for SV-TUF1SB and TV-AL5. It can be seen from the graph that TV-AL5 delivery rate is more substantially affected by pressure ratio than SV-TUF1SB, particularly at low speeds. The sliding vane compressor does not quite achieve the same mass flow rate as the trailing vane compressor at speeds greater than 3000 rpm, due to its smaller swept volume. However, at and below 3000 rpm, and at the same pressure ratios, SV-TUF1SB exceeds the flow rate capacity of TV-AL5.

The use of two vanes on SV-TUF1SB would probably increase the flow rate, due to improved trapping of air, although as mentioned before, it would be accompanied by a doubling of friction power consumption. Alternatively, a longer compressor with a single vane could be used to match the flow rate capability of the trailing vane blower at higher speeds, while consuming less power.

Use of a single piece vane enables partial counteraction of centrifugal force acting on one vane section by centrifugal force acting on the diametrically opposite vane section. A reduction in wall reaction on the whole vane is thus obtained. This is not possible with the use of radially separate vanes. However, one way of reducing wall reaction, using radially separate vanes, is by decreasing the height, and hence the mass of each vane. An additional analysis has thus been carried out to determine if a practical vane height exists for the Type 2 compressor which, when utilised, will lead to lower power consumption than its Type 1 equivalent.

Figure 11 shows the theoretical maximum torques applied by the rotor of the Type 2 model using a circular housing cross-section, plotted against vane height. Test conditions and other compressor dimensions are the same as those given on Table 1. Minimum vane height is 2e, or equal to the largest separation between the rotor and the housing. It must be noted that a vane of this height will not have any penetration into the rotor slot at the position of maximum extension from the rotor.

It can be seen that although peak torque values decrease as vane height (and hence vane mass) is decreased, peak torque required with even impractically short vanes is still higher than that of its Type 1 equivalent. This indicates that for the same conditions the Type 1 compressor will always require less power to operate than its equivalent Type 2 compressor.

5. CONCLUSIONS

Comparison of predicted performance with an existing trailing vane compressor showed the potential advantages of the sliding vane compressor with a single piece vane in terms of friction power consumption and flow capacity. Subsequently, the prediction method was shown to give good agreement with test results from a prototype. Comparison of theoretical results for similar sized single-piece and separate vane types of sliding vane compressors showed a higher friction power requirement for the latter for all practical vane heights. From these, it can be concluded that the single-piece sliding vane compressor design is preferable and its use with the engine should result in a substantial increase in brake power output. The use of a single vane in the compressor seems preferable to the use of two, as the doubling of friction power consumption in the case of two vanes will probably not be followed by an increase in flow rate capacity of the same proportion. The use of a cardioid housing may also be more advantageous than the use of a circular one, in terms of lower reaction forces on the vane, and hence lower friction power consumption and less wear on the vanes. Tests for a single-piece vane compressor with a cardioid housing, and further tests for the prototype, need to be made to further quantify the performance trends observed.

6. SUGGESTED IMPROVEMENTS TO THE ANALYSES

In the simplified analyses of the friction losses for both types of sliding vane compressors, the wall reaction normal to the housing was assumed to pass through the centre of rotation of the rotor. Since the wall reaction R_W in the models is actually only a component of the real wall reaction R_{WC} (Fig. 12) acting in the direction normal to the housing, this will not truly be the case.

In Fig. 12 it can be seen that when the vane or vane section has a radially outward velocity, R_W should be greater than R_{WC}, and F_{RW} less than μR_{WC} and μR_W, if they are to add up to the same equivalent reaction force R_{res}, acting in the same direction. The opposite is true when the vane has a radially inward velocity. Hence, since torque required from the rotor is partly dependent on F_{RW}, and highest torque is required while vane velocity is radially outwards (Fig. 5b), when F_{RW} is over-estimated, friction power consumption is also over-estimated. This would result in power consumption estimates for the compressors being slightly higher than experimental results.

For simplicity, the difference in pressure across the vanes has been assumed a constant fraction of the overall pressure difference, acting according to assumption 6. Pressure difference in fact rises slowly as one side of each vane is exposed to the outlet pressure, reaches a peak, and settles down to the outlet-inlet pressure difference value, as the vane revolves (Ref. 3). The exact way this pressure difference varies for the particular compressors considered, however, is still unknown.

The figure used for the coefficient of friction is the same as that for a lubricated steel on steel contact, and is assumed constant for all conditions. This may not be true in the case of a lubricated Tufnol on aluminium contact at different speeds and temperatures. More knowledge of the friction properties of contact between the two different materials is needed for better estimates of friction power loss.

Taking the above into account in the analyses would enable more accurate friction power consumption predictions and reasonably accurate estimates of adiabatic efficiencies to be made, but they are not expected to affect the conclusions drawn.

ACKNOWLEDGEMENTS

The author wishes to thank the members of the Experimental Projects Group, Propulsion Branch, Aeronautical Research Laboratory, for their expert advice and opinions.

REFERENCES

1. Catchpole, B.G. Propulsion Systems for Australian Remotely Piloted Vehicles. Mechanical Engineering Technical Memorandum 366. Aeronautical Research Laboratories, Australian Defence Scientific Service, 1975.

2. Brizuela, E. Theoretical Study of a Curved Vane Blower. Propulsion Report 179. Aeronautical Research Laboratory, Defence Science and Technology Organisation. (To be published).

3. Sakamaki, H. and others. An Analysis of Frictional Power Loss for Developed New Vane Type Super Charger Compressor. SAE Technical Paper Series No. 880564. International Congress and Exposition, Detroit, Michigan, 24 February - 4 March 1988.

BIBLIOGRAPHY

1. Sakamaki, H. Theoretical Analysis and Result of Test of Friction Loss Power in Originally Developed Vane Compressor. SAE Technical Paper Series No. 880565. International Congress and Exposition, Detroit, Michigan, 24 February - 4 March 1988.

2. Sakamaki, H. and others. Analysis of Air-charging Efficiency for Developed New Type Super Charger Compressor on Automobile. SAE Technical Paper Series No. 880562. International Congress and Exposition, Detroit, Michigan, 24 February - 4 March 1988.

3. Meriam, J.L. Dynamics, SI Version. Second Edition. John Wiley and Sons, Inc., Canada, 1975.

Speed	=	4800 rpm
Pressure ratio	=	1.22
Housing radius	=	42 mm
Rotor eccentricity	=	6 mm
Annular volume	=	147 ml
Number of vanes	=	1 for Type 1
	=	2 for Type 2
Vane material density	=	1360 kg/m3
Vane thickness	=	3 mm
Vane length	=	$2R_o$ = 83.2 mm for Type 1
	=	2*2e = 24 mm for Type 2

TABLE 1. SPECIFICATIONS FOR TYPE 1 AND TYPE 2 COMPRESSORS

	Type 1 model	TV-AL5
Housing	cardioid	circular
Dimensions Rotor diameter Housing diameter Compressor length	 72 84 110	 100 120 50
Number of vanes	2	2
Materials used Rotor Vane Housing	 - Tufnol -	 Aluminium Aluminium Steel
Ports Inlet Outlet	 circular, tangential circular, tangential	 kidney, side circular, tangential

TABLE 2. COMPRESSOR SPECIFICATIONS FOR TYPE 1 MODEL AND TV-AL5

Housing cross section	:	Circular
Number of vanes	:	1
Dimensions		
Rotor diameter	:	72 mm
Housing diameter	:	84 mm
Compressor length	:	100 mm
Materials used		
Rotor	:	steel
Vane	:	Tufnol
Housing	:	Aluminium

TABLE 3. TYPE 1 PROTOTYPE SV-TUF1SB SPECIFICATIONS

APPENDIX 1.

EXPRESSIONS FOR FORCES ON VANE CENTRE OF GRAVITY

The general expressions for the forces acting on each vane or vane section centre of gravity are set out below.

Centrifugal force

$$F_{cg} = m\omega^2\bar{x}_m$$

Coriolis force

$$F_{cor} = 2m\omega\dot{\bar{x}}_m$$

Inertia force

$$F_i = m\ddot{\bar{x}}_m$$

Radial distance of centre of gravity from rotor axis of rotation:

$\bar{x}_m = \dfrac{\Sigma m_n x_n}{\Sigma m_n}$ for Type 1 compressor using a hollowed vane

m_n = vane component mass
x_n = radial distance of vane component centre of gravity from rotor axis.

$= r_x/2$ for Type 1 compressor using a solid vane

$= r-(b/2)$ for Type 2 compressor using a solid vane.

Radial velocity

$\dot{\bar{x}}_m = e\omega\cos\theta$ using a cardioid housing.

$= r_h e \sin(C_2)[r_h^2+e^2-2r_h e\cos(C_2)]^{-1/2}C_3$ using a circular housing

where $C_1 = (1 - (\frac{e\sin\beta}{r_h})^2)^{-1/2}$

$C_2 = \beta - \sin^{-1}[\frac{e\sin\beta}{r_h}]$

$C_3 = \omega - \frac{e\omega\cos\beta}{r_h} C_1$

$\beta = \theta + 90$

Radial acceleration:

$\ddot{x}_m = -e\omega^2 \sin\theta$ using a cardioid housing.

$= h_1 h_2 \ (h_3 - h_4) + h_5 \ (h_6 - h_7 + h_8 - h_9)$ using a circular housing.

where $h_1 = -[r_h{}^2 + e^2 - 2r_h \ e \cos \ (C_2)]^{-3/2}$

$h_2 = r_h \ e \sin \ (C_2) \ C_3$

$h_3 = e\omega r_h \sin \ (C_2)$

$h_4 = e^2 \omega C_1 \cos \beta \sin \ (C_2)$

$h_5 = [r_h{}^2 + e^2 - 2r_h \ e \cos \ (C_2)]^{-1/2}$

$h_6 = e\omega r_h \cos \ (C_2) \ C_3$

$h_7 = (e^2 \omega \cos \beta / r_h)^2 C_1{}^3 \sin \beta \sin \ (C_2)$

$h_8 = C_1 \ e^2 \omega^2 \sin \beta \sin \ (C_2)$

$h_9 = C_1 C_3 \ \omega e^2 \cos \beta \cos \ (C_2)$

Outlet port

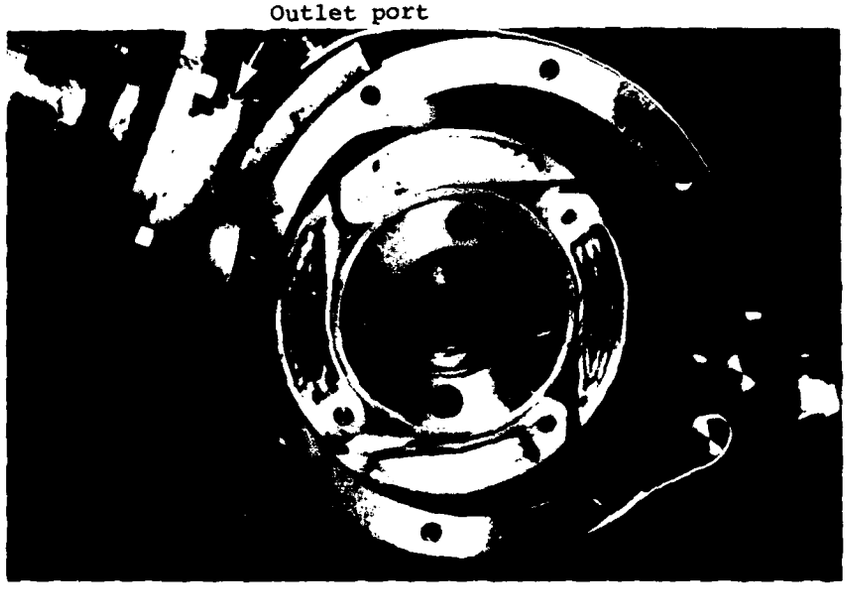

(Inlet side housing cover removed)

FIGURE 1: TRAILING VANE COMPRESSOR

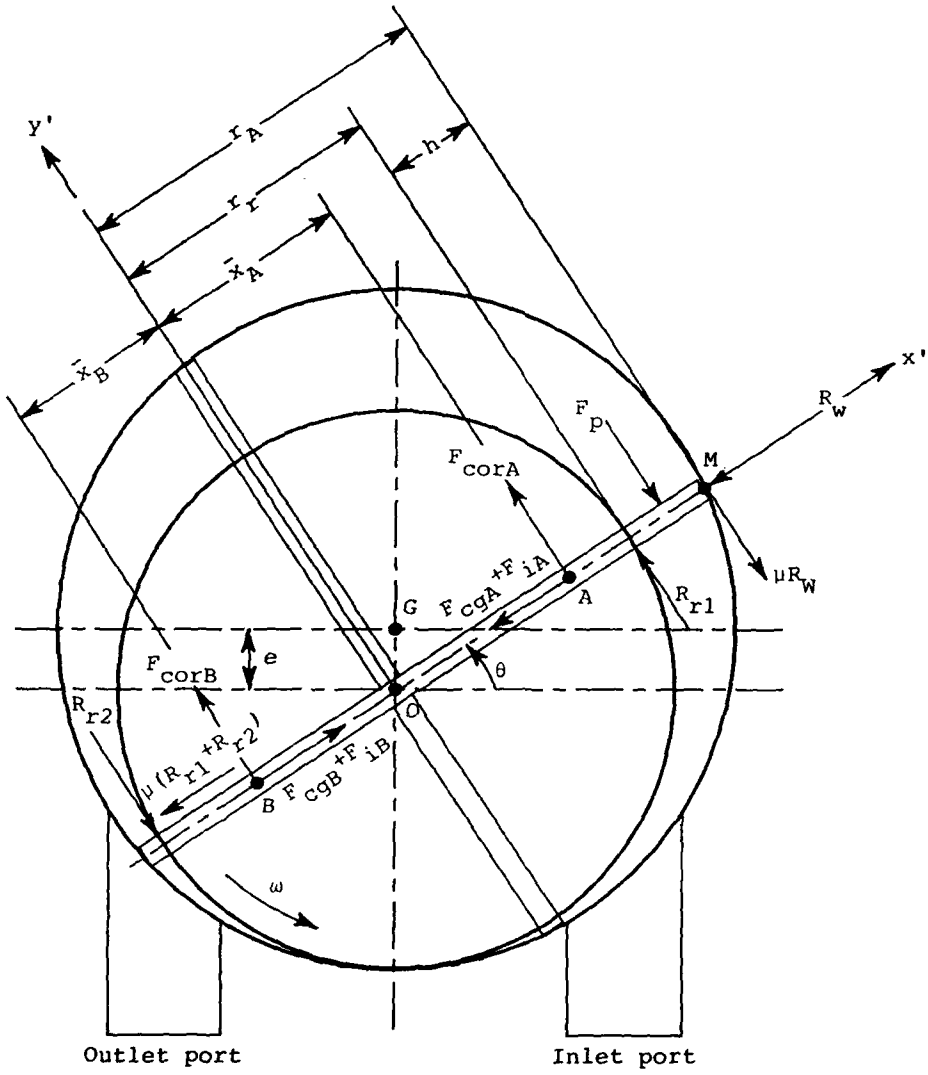

FIGURE 2: TYPE 1 SLIDING VANE COMPRESSOR

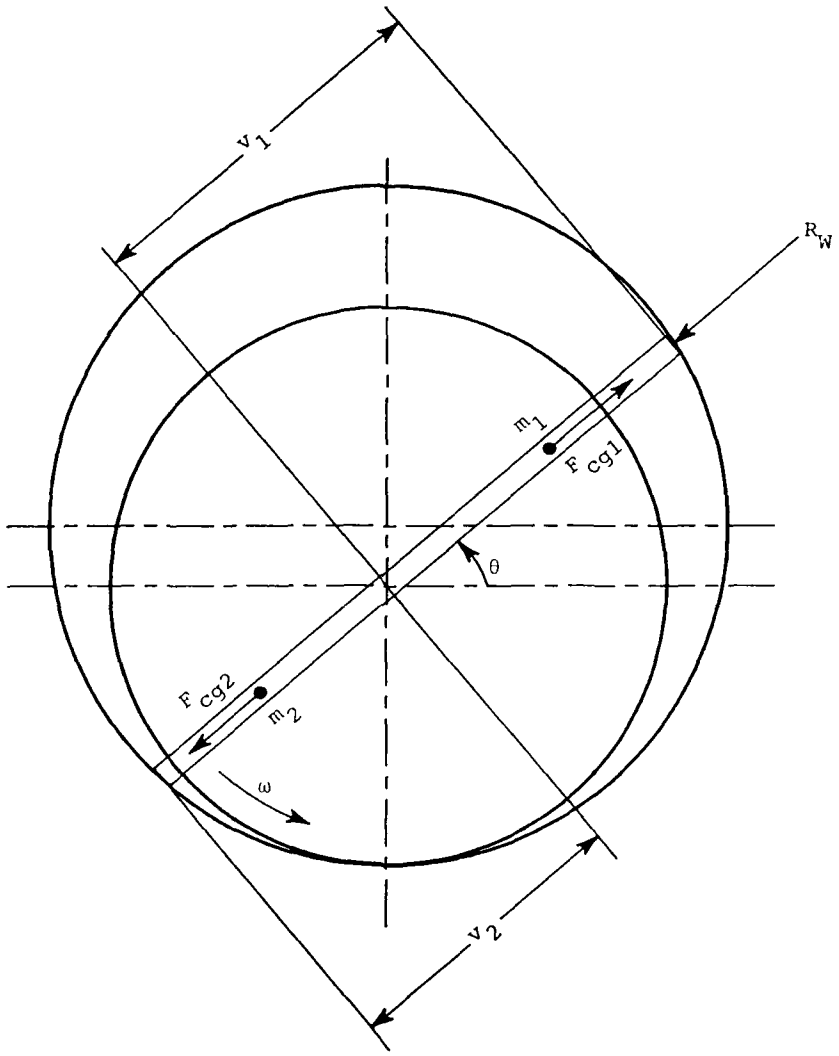

FIGURE 3: TENSION WITHIN ONE VANE IN TYPE 1 COMPRESSOR

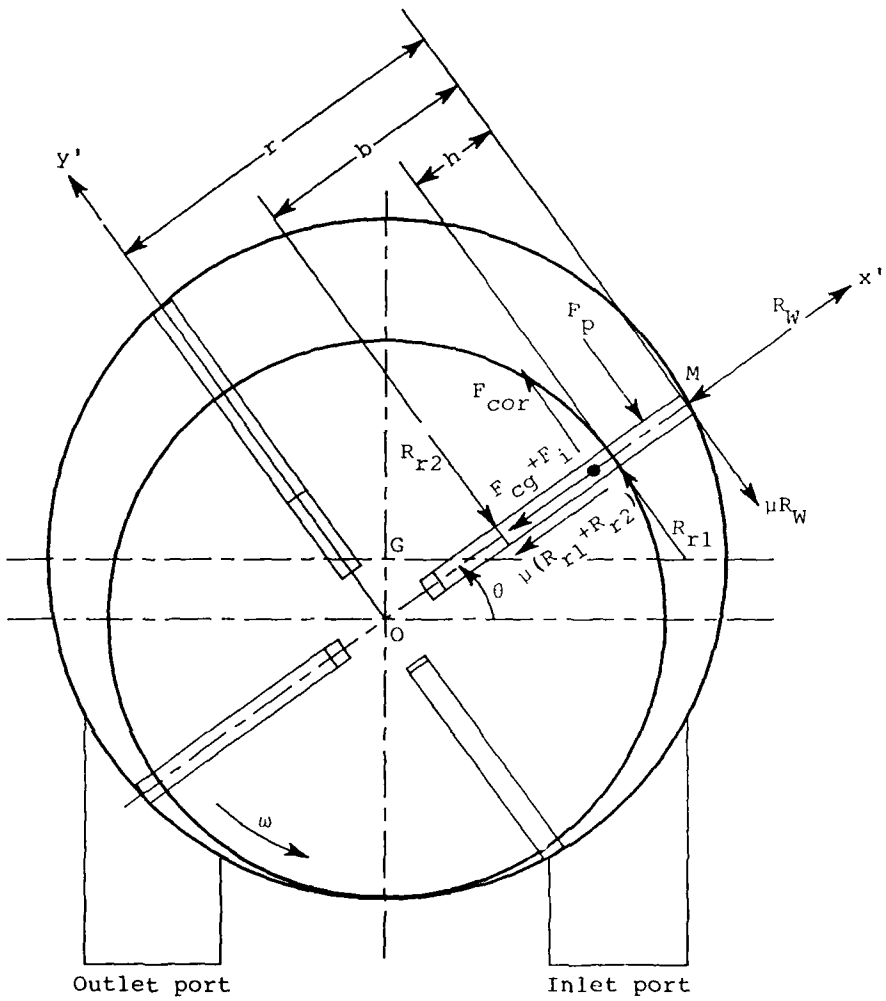

FIGURE 4: TYPE 2 SLIDING VANE COMPRESSOR

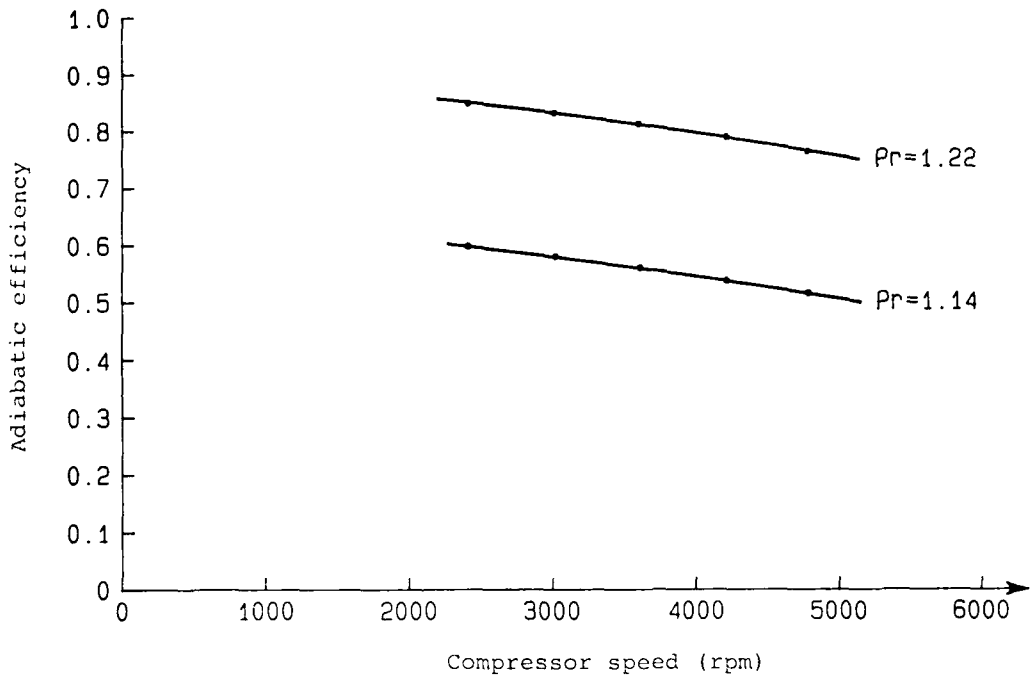

FIGURE 5: ASSUMED ADIABATIC EFFICIENCY FOR TYPE 1 AND TYPE 2 COMPRESSORS

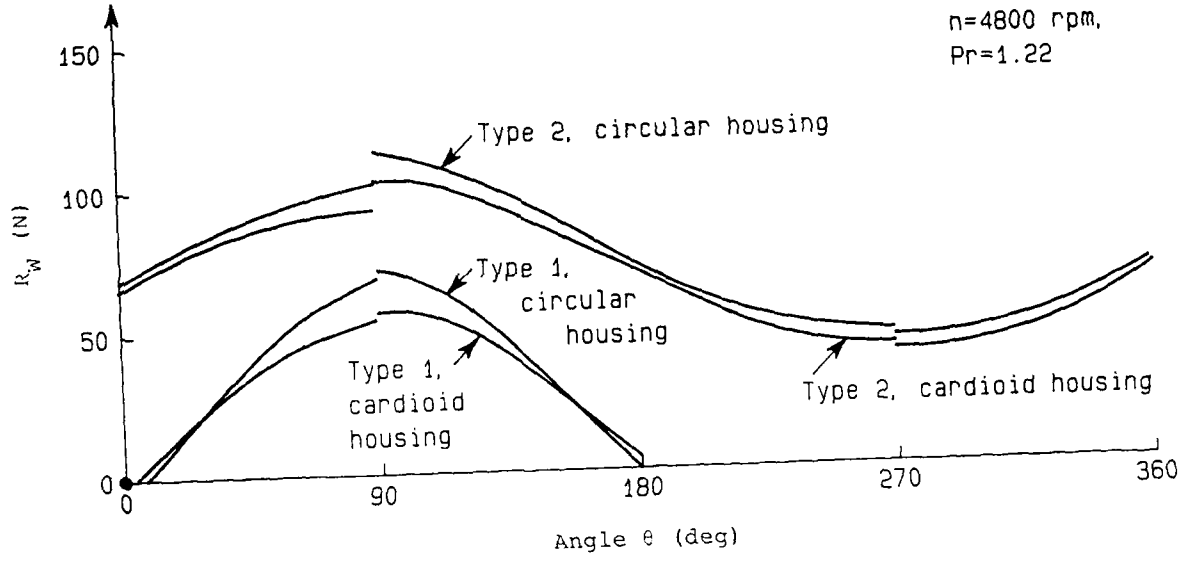

FIG 6a): WALL REACTION R_W ON EACH VANE FOR TYPE 1 AND 2 COMPRESSORS

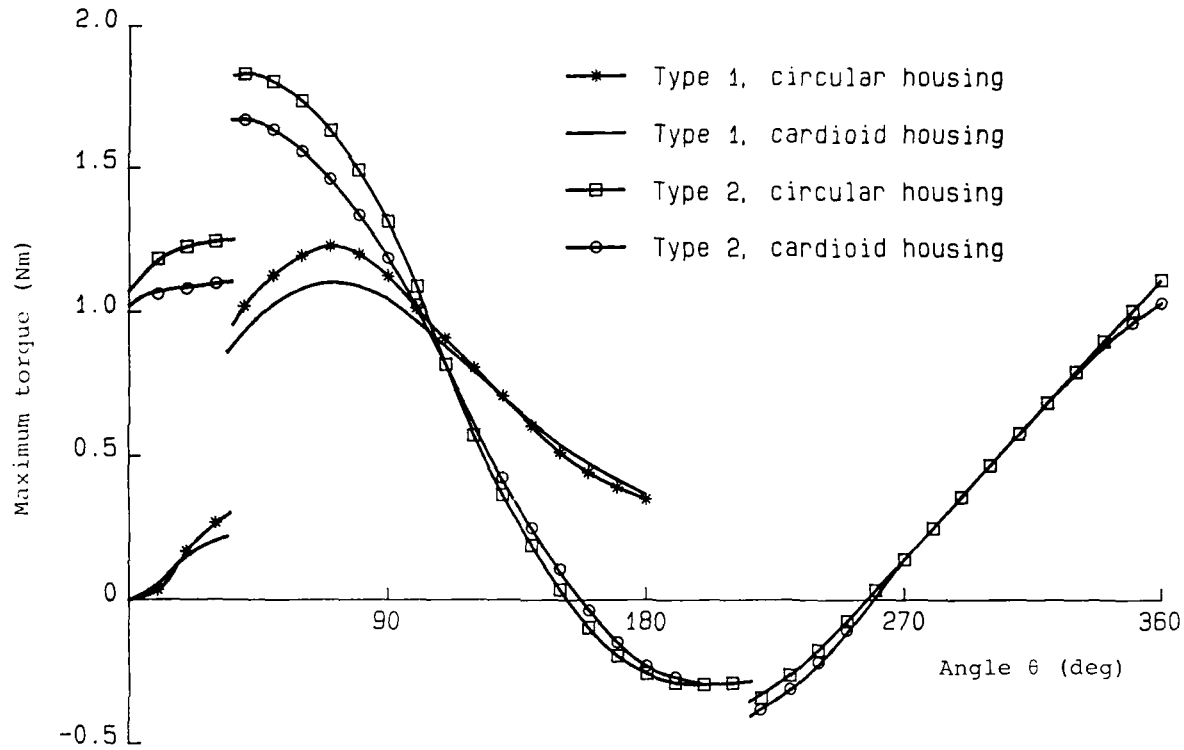

FIGURE 6b): VARIATION OF TORQUE FOR EACH VANE AND VANE SECTION WITH VANE POSITION

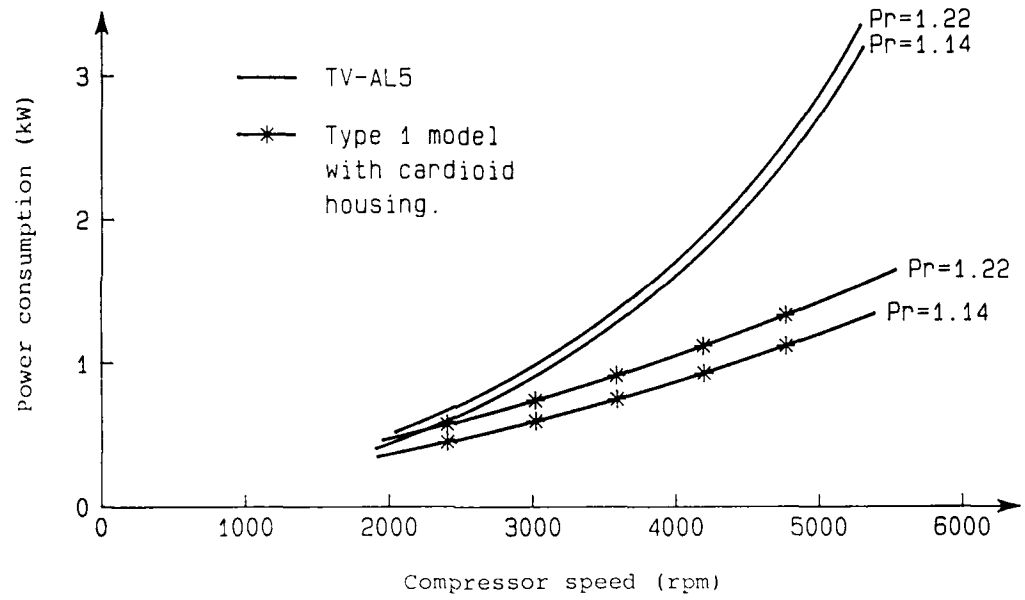

FIGURE 7: POWER CONSUMPTION, ESTIMATED FOR TYPE 1, OBSERVED FOR TV-AL5

FIGURE 8a): TYPE 1 PROTOTYPE SV-TUF1SB

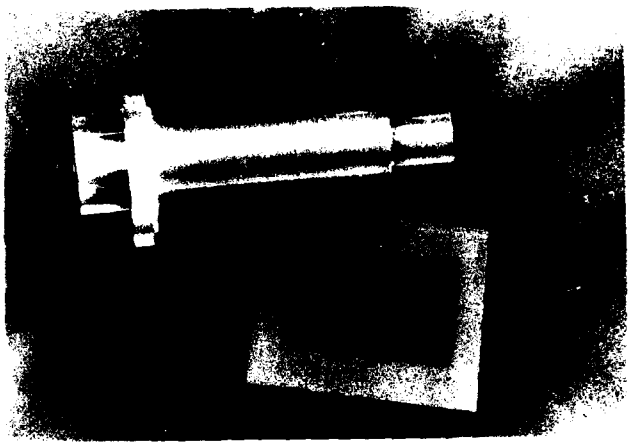

FIGURE 8(b): SV-TUF1SB ROTOR AND VANE

FIGURE 8(c): SV-TUF1SB HOUSING

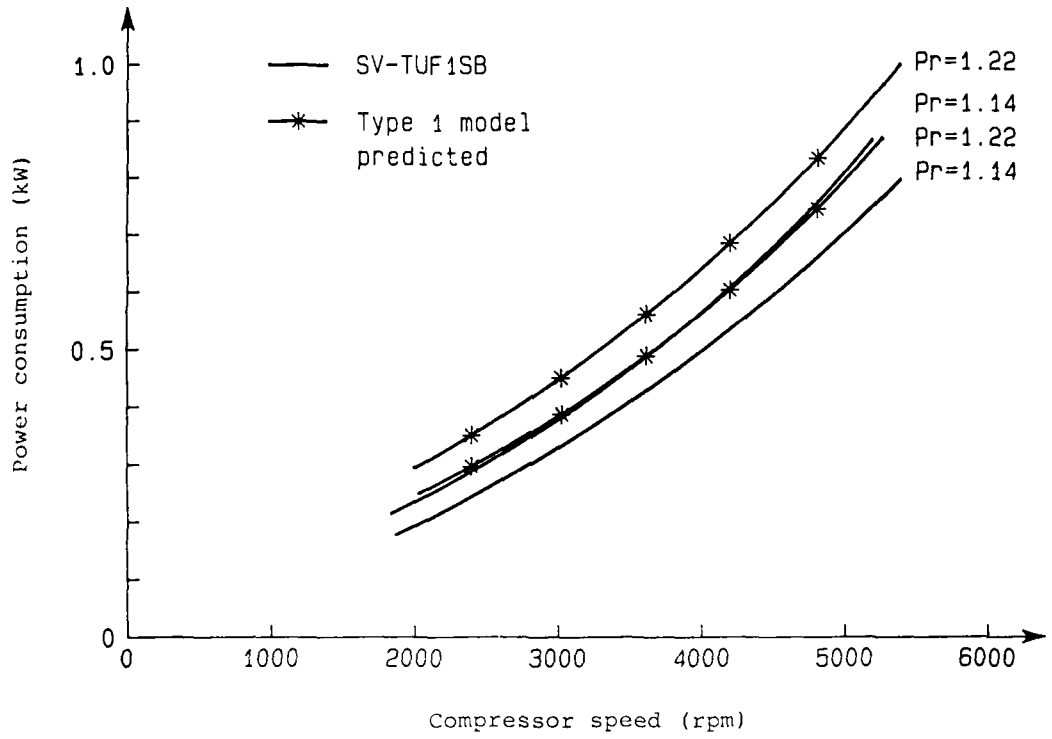

FIGURE 9: EXPERIMENTAL AND PREDICTED POWER CONSUMPTION FOR SV-TUF1SB

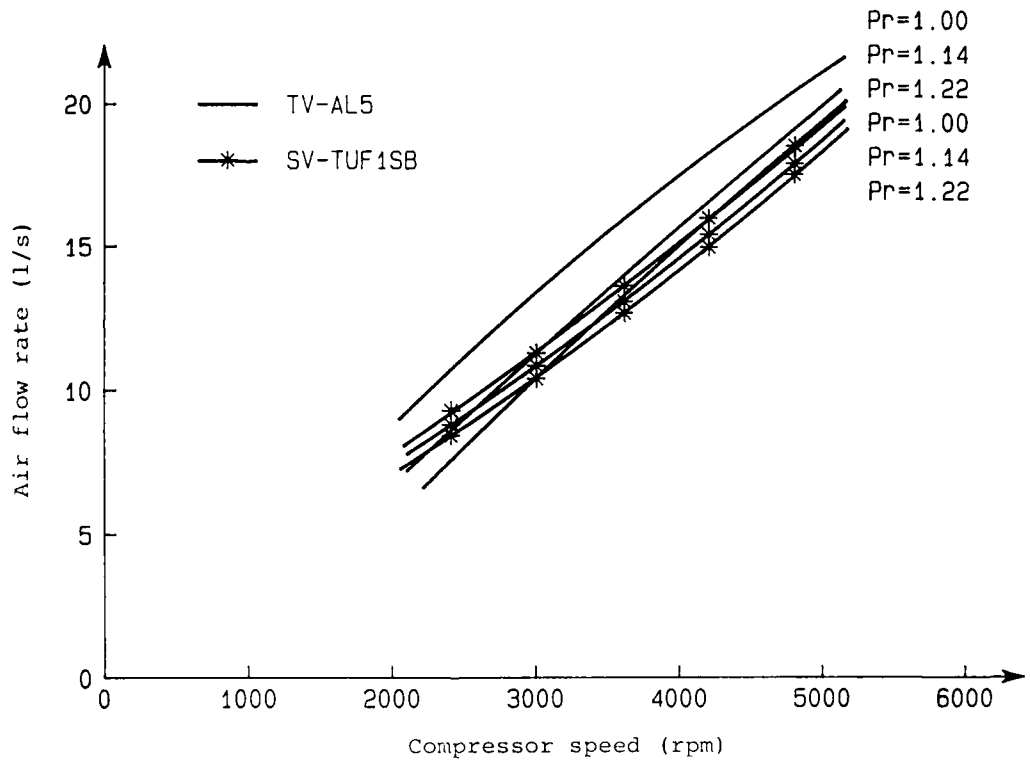

FIGURE 10: VOLUME FLOW RATES FOR SV-TUF1SB AND TV-AL5

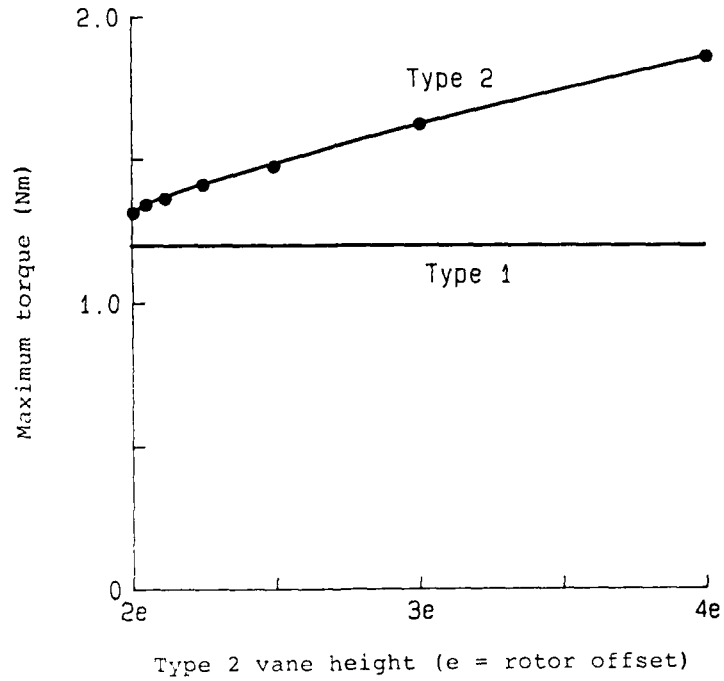

FIGURE 11: EFFECT OF VARYING TYPE 2 VANE HEIGHT ON MAXIMUM TORQUE REQUIRED

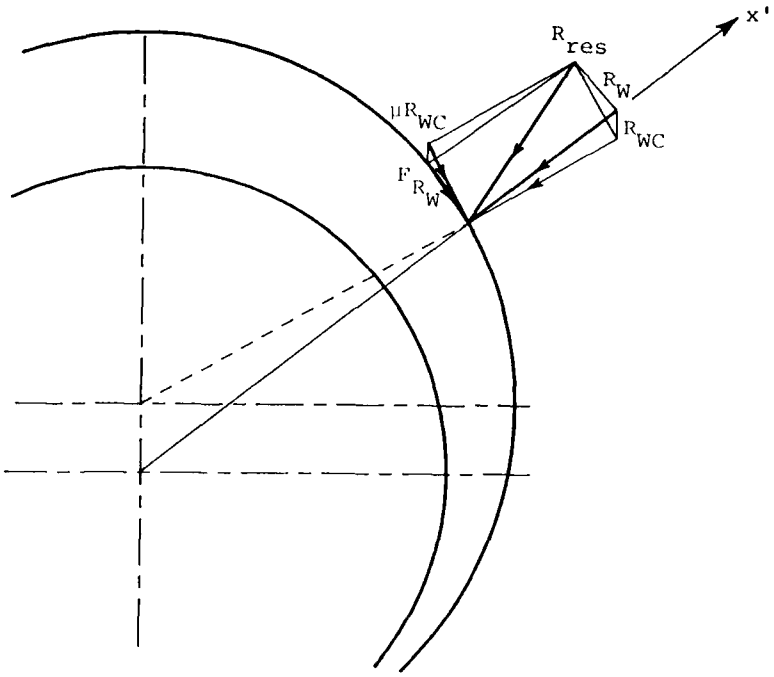

FIGURE 12: REACTION FORCES ON VANE TIP

DISTRIBUTION

AUSTRALIA

Department of Defence

Defence Central
- Chief Defence Scientist
- FAS Science Corporate Management (shared copy)
- FAS Science Policy (shared copy)
- Director, Departmental Publications
- Counsellor, Defence Science, London (Doc Data Sheet Only)
- Counsellor, Defence Science, Washington (Doc Data Sheet Only)
- OIC TRS, Defence Central Library
- Document Exchange Centre, DISB (18 copies)
- Defence Industry and Materiel Policy, FAS

Aeronautical Research Laboratory
- Director
- Library
- Chief - Flight Mechanics and Propulsion Division
- Head - Propulsion Branch
- Branch File - Propulsion
- Author: A.A. Mabanta
- B.G. Catchpole
- B. Parmington

Defence Science & Technology Organisation - Salisbury
- Library

Navy Office
- Navy Scientific Adviser (3 copies Doc Data sheet)

Army Office
- Scientific Adviser - Army (Doc Data sheet only)

Air Force Office
- Air Force Scientific Adviser (Doc Data sheet only)

Statutory and State Authorities and Industry
- Aero-Space Technologies Australia, Manager/Librarian (2 copies)
- Hawker de Havilland Aust Pty Ltd, Victoria, Library
- Gas & Fuel Corporation of Vic., Manager Scientific Services
- SEC of Vic., Herman Research Laboratory, Library

Universities and Colleges
- NSW
  - Library, Australian Defence Force Academy

SPARES (10 copies)
TOTAL (47 copies)

AL 149 DEPARTMENT OF DEFENCE

DOCUMENT CONTROL DATA

PAGE CLASSIFICATION
UNCLASSIFIED

PRIVACY MARKING

1a. AR NUMBER	1b. ESTABLISHMENT NUMBER	2. DOCUMENT DATE	3. TASK NUMBER
AR-005-643	ARL-PROP-TM-464	JULY 1989	DST 87/043

4. TITLE
ANALYSES OF POWER CONSUMPTION FOR TWO SLIDING VANE TYPE COMPRESSORS

5. SECURITY CLASSIFICATION (PLACE APPROPRIATE CLASSIFICATION IN BOX(S) IE. SECRET (S), CONF.(C) RESTRICTED (R), UNCLASSIFIED (U)).

DOCUMENT	TITLE	ABSTRACT
U	U	U

6. NO. PAGES
30

7. NO. REFS.
3

8. AUTHOR(S)
A.A. MABANTA

9. DOWNGRADING/DELIMITING INSTRUCTIONS
NOT APPLICABLE

10. CORPORATE AUTHOR AND ADDRESS

AERONAUTICAL RESEARCH LABORATORY
P.O. BOX 4331, MELBOURNE VIC 3001

11. OFFICE/POSITION RESPONSIBLE FOR:

SPONSOR DSTO
SECURITY -
DOWNGRADING -
APPROVAL CFPD

12. SECONDARY DISTRIBUTION (OF THIS DOCUMENT) Approved for public release.

OVERSEAS ENQUIRIES OUTSIDE STATED LIMITATIONS SHOULD BE REFERRED THROUGH ASDIS, DEFENCE INFORMATION SERVICES BRANCH, DEPARTMENT OF DEFENCE, CAMPBELL PARK, CANBERRA, ACT 2601

13a. THIS DOCUMENT MAY BE ANNOUNCED IN CATALOGUES AND AWARENESS SERVICES AVAILABLE TO....
No limitations.

13b. CITATION FOR OTHER PURPOSES (IE. CASUAL ANNOUNCEMENT) MAY BE [X] UNRESTRICTED OR [ ] AS FOR 13a.

14. DESCRIPTORS

Two stroke cycle engines
Power consumption

15. DRDA SUBJECT CATEGORIES
0081J

16. ABSTRACT

An outline is given of the theoretical analyses carried out for estimating the power requirements of two sliding vane compressor designs, adapted for high speed operation, to determine if advantages exist over a trailing vane compressor, previously used for air scavenging in an experimental two stroke piston engine.

PAGE CLASSIFICATION
UNCLASSIFIED
PRIVACY MARKING

THIS PAGE IS TO BE USED TO RECORD INFORMATION WHICH IS REQUIRED BY THE ESTABLISHMENT FOR ITS OWN USE BUT WHICH WILL NOT BE ADDED TO THE DISTIS DATA UNLESS SPECIFICALLY REQUESTED.

16. ABSTRACT (CONT.)

17. IMPRINT

AERONAUTICAL RESEARCH LABORATORY, MELBOURNE

18. DOCUMENT SERIES AND NUMBER	19. COST CODE	20. TYPE OF REPORT AND PERIOD COVERED
PROPULSION TECHNICAL MEMORANDUM 464	45-1210	

21. COMPUTER PROGRAMS USED

22. ESTABLISHMENT FILE REF.(S)

23. ADDITIONAL INFORMATION (AS REQUIRED)